SMART PUBLIC SURVEILLANCE AND PUBLIC SAFETY ALERT SYSTEM USING ARDUINO AND PYTHON INTEGRATION

A project submitted to the Bharathidasan University
in partial fulfillment of the requirements
for the award of the Degree of

BACHELOR OF COMPUTER APPLICATIONS

Submitted by

KISHORE KHANTH S
Register Number: 235113540

Under the guidance of

Dr. R. PREETHI,
M.Sc., M.Phil., Ph.D.,
Assistant Professor

DEPARTMENT OF COMPUTER APPLICATIONS

BISHOP HEBER COLLEGE (AUTONOMOUS)

"Nationally Reaccredited at A^{++} Grade with a CGPA of 3.69 out of 4 in NAAC IV Cycle"

Recognized by UGC as "College of Excellence"
Affiliated to Bharathidasan University

TIRUCHIRAPPALLI-620 017

OCTOBER – 2025

DECLARATION

I hereby declare that the project work presented is originally done by me under the guidance of **Dr.Ms. R. Preethi, M.Sc., M.Phil., Ph.D., , Assistant Professor, UG Department of Computer Applications, Bishop Heber College (Autonomous), Tiruchirappalli-620 017** and has not been included in any other thesis/project submitted for any other degree.

Name of the Candidate : Kishore Khanth S

Register Number : 235113540

Batch : 2023-2026

Signature of the Candidate

Dr. /Ms. R. PREETHI M.Sc., M.Phil., Ph.D.,

Assistant Professor,

UG Department of Computer Applications,

Bishop Heber College (Autonomous),

Tiruchirappalli – 620017

Date:

CERTIFICATE

This is to certify that the project work entitled "**SMART PUBLIC SURVEILLANCE AND PUBLIC SAFETY ALERT SYSTEM USING ARDUINO AND PYTHON INTEGRATION"** is a bonafied record work done by **KISHORE KHANTH S (235113540)** in partial fulfilment of the requirements for the award of the degree of **BACHELOR OF COMPUTER APPLICATIONS** during the period **2023-2026**

Place: **Signature of the Guide**

UG DEPARTMENT OF COMPUTER APPLICATIONS

BISHOP HEBER COLLEGE (AUTONOMOUS),

"Nationally Reaccredited at A^{++} Grade with a CGPA of 3.69 out of 4 in NAAC IV Cycle"
(Recognized by UGC as "College of Excellence")
(Affiliated to Bharathidasan University)

TIRUCHIRAPPALLI – 620 017

Date:

Course Title: Project **Course Code: U23CA5PJ**

CERTIFICATE

The Viva-Voce examination for the candidates **Kishore Khanth S (235113540)** was held on _____.

Signature of the Guide **Signature of the HOD**

Examiners:

1.

2.

ACKNOWLEDGEMENT

I would like to thank almighty for blessing me with strength and health. Inspiration and motivation has always played a key role in success of my venture.

I wish to express my sincere thanks to **Dr. PRINCY MERLIN M.Sc., M.Phil., Ph.D., Principal, Bishop Heber College, Tiruchirappalli** who gave me the opportunity to do the course in this college.

I show my deep sense of gratitude to **Dr. J. JAMES MANOHARAN, MCA., M.Phil., Ph.D., PGDCA., Associate Professor and Head, UG Department of Computer Applications, Bishop Heber College, Tiruchirappalli**. Who encourage me and provided me the opportunity to prepare the project.

I am grateful to thank my guide **Dr. R. PREETHI M.SC., M.Phil., Ph.D., Assistant Professor, UG Department of Computer Application** who encouraged, motivated, corrected at every step, whose valuable guidance and supervision has helped me throughout the project which has shaped my project work as it shows.

I also thank technical staffs for their valuable guidance and support throughout the project, I am also immensely obliged to my friends for their elevating inspirational, support and encouragement in completion of this project.

Last but not the least, my parents, the one who aspires me to be focused, and dedicated in the work I do, and for being my moral support, so with due regards I express my gratitude to them.

KISHORE KHANTH S

Table of Contents

S.No.	Title	Page No.
1	Abstract	
2	Introduction	
3	Existing and Proposed System	
4	Software and Hardware Requirements	
5	Review of Literature	
6	Definition of the Problem and Scope of the Research work	
7	Architectural Design	
8	Results and Discussions	
9	Conclusion & Future Enhancement	
10	References	
11	Paper Publication	
12	Appendix	

ABSTRACT

ABSTRACT

The rapid advancement of smart home technologies has created an increasing demand for intelligent and reliable home security systems. This research presents the design and implementation of an IoT-based home security solution integrating real-time person detection, motion sensing, and automated alert mechanisms. The system leverages the YOLO (You Only Look Once) algorithm for high-accuracy, real-time intruder detection through a webcam, complemented by Passive Infrared (PIR) sensors to capture motion in areas with limited visibility. The NodeMCU ESP8266 microcontroller serves as the central hub, managing the coordination between sensors, relays, and an SMS module to deliver instant notifications via text messages and voice calls. Additional hardware components, including LEDs, buzzers, and a proactive deterrent sprayer, enhance local response and improve overall security coverage. The proposed system offers a layered and comprehensive security framework by combining computer vision, IoT device management, and communication technologies. Evaluation under varied environmental conditions demonstrated high detection accuracy, rapid notification delivery, and reliable relay control for lights and deterrent devices. By eliminating dependence on internet-based platforms, the system ensures accessibility in areas with unstable connectivity, providing a cost-effective and practical solution for modern homes. The integration of advanced algorithms with IoT-enabled automation highlights the potential of intelligent home security systems to deliver both preventative and responsive measures, setting the foundation for future enhancement

INTRODUCTION

CHAPTER 1

INTRODUCTION

The rise of smart home technologies has transformed the way living spaces are managed, emphasizing convenience, automation, and efficiency. Central to this transformation is the integration of interconnected devices through the Internet of Things (IoT), which allows seamless communication between hardware components and smart applications. Among the various applications of smart homes, ensuring security remains a critical concern, as homeowners require systems that can not only detect unauthorized access but also provide real-time alerts and enable rapid responses to potential threats. Traditional security solutions often rely on standalone devices or manual monitoring, which may limit effectiveness in detecting and mitigating intrusions promptly. To address these limitations, this research proposes an IoT-based home security system that combines real-time person detection with motion sensing and automated alert mechanisms. The system employs the YOLO (You Only Look Once) algorithm for high-speed and accurate detection of individuals through a webcam, ensuring immediate identification of potential intruders. In parallel, Passive Infrared (PIR) sensors monitor motion in blind spots or low-light conditions, triggering local alarms via LEDs and buzzers to deter unauthorized entry. This multi-layered approach enhances security coverage, ensuring both proactive and reactive measures are in place to protect the household environment. The NodeMCU ESP8266 microcontroller forms the core of the system, enabling integration of hardware components, real-time processing, and SMS-based communication. By using a SIM800L/SIM900 module, the system delivers instant text messages and voice call alerts directly to the homeowner, eliminating reliance on internet-based platforms and making the solution suitable for areas with limited connectivity. Additionally, relays connected to lights and a deterrent sprayer provide automated physical responses to detected intrusions, further strengthening the home's defense mechanisms. This research demonstrates a cost-effective, scalable, and practical approach to modern home security, highlighting the potential of IoT-driven systems in safeguarding smart living spaces.

EXISTING AND PROPOSED SYSTEM

CHAPTER 2

EXISTING SYSTEM PROPOSED SYSTEM

2. EXISTING SYSTEM

Traditional home security systems primarily rely on standalone devices such as CCTV cameras, motion sensors, or alarm systems that operate independently. These systems often require continuous manual monitoring or periodic checking by homeowners to ensure their functionality. While cameras can record activities, they typically lack real-time automated alert mechanisms to notify users immediately upon detecting intrusions. Similarly, conventional motion sensors or alarms may trigger local alerts but are unable to communicate remotely, limiting their effectiveness in preventing unauthorized access when residents are away. Existing IoT-enabled security solutions have attempted to integrate sensors and cameras with cloud-based platforms or mobile applications to provide remote monitoring. However, these systems often depend heavily on stable internet connectivity, which can be unreliable in certain regions. Additionally, many solutions focus solely on detection and alerting without incorporating proactive response mechanisms, such as controlling lights, buzzers, or deterrent devices. As a result, intrusions may not be effectively mitigated in real-time, reducing the overall security effectiveness. Furthermore, traditional systems generally lack an intelligent detection mechanism to differentiate between actual intrusions and false alarms caused by pets, environmental factors, or non-threatening movement. This limitation can lead to frequent false alerts, creating inconvenience and reducing user trust in the system.

DISADVANTAGES

- Traditional systems rely heavily on manual monitoring, which limits real-time response to intrusions.
- Many existing solutions depend on stable internet connectivity, making them ineffective in areas with poor or intermittent network access.
- Conventional systems often lack proactive deterrence mechanisms, such as automated lights, buzzers, or sprayers, to actively prevent unauthorized access.
- High false alarm rates due to pets, environmental factors, or non-threatening motion reduce reliability and user trust in the system.
- Standalone sensors and cameras typically operate independently, lacking integration for a comprehensive, layered security approach.

PROPOSED SYSTEM

The proposed system introduces an advanced IoT-based home security framework that integrates real-time person detection, motion sensing, and automated alert mechanisms to enhance household safety. Leveraging the YOLO (You Only Look Once) algorithm, the system achieves high-speed and accurate detection of individuals through a webcam, ensuring immediate identification of potential intruders. Complementary to this, Passive Infrared (PIR) sensors monitor motion in low-light or blind-spot areas, triggering immediate local alerts via LEDs and buzzers. By combining computer vision with sensor-based detection, the system establishes a multi-layered security mechanism that not only detects but also proactively responds to unauthorized access. At the core of the system is the NodeMCU ESP8266 microcontroller, which orchestrates the coordination between hardware components, including relays, LEDs, buzzers, and an SMS module. The SIM800L/SIM900 module enables the system to send instant SMS alerts and voice calls directly to the homeowner, eliminating dependence on internet-based platforms and ensuring real-time communication even in areas with limited connectivity. Relays connected to lights and a deterrent sprayer activate upon detecting a person, providing an additional layer of proactive security. The proposed system offers a reliable, scalable, and cost-effective solution for modern smart homes, combining intelligent detection, automated responses, and seamless communication for enhanced home safety.

ADVANTAGES

- Provides real-time intruder detection using YOLO-based computer vision, ensuring high accuracy and rapid response.
- Integrates PIR sensors and local alarms (LEDs and buzzers) for multi-layered security, covering blind spots and low-light areas.
- Enables instant SMS and voice call alerts through the SIM800L/SIM900 module, eliminating reliance on internet-based platforms.
- Incorporates automated control of lights and deterrent devices, offering proactive security measures to prevent intrusions.
- Offers a cost-effective, scalable, and easily deployable solution suitable for modern smart homes, enhancing overall safety and user convenience.

SOFTWARE AND HARDWARE REQUIREMENTS

CHAPTER 3

SOFTWARE AND HARDWARE REQUIREMENTS

HARDWARE REQUIREMENTS

- NodeMCU ESP8266 Module : Wi-Fi-enabled microcontroller for sensor and relay management
- Webcam : High-resolution camera for YOLO-based person detection
- PIR Motion Sensors : Passive Infrared sensors for motion detection
- SMS Module (SIM800L/SIM900) : GSM module for sending SMS and making calls
- Relays : For controlling lights and deterrent devices (sprayer)
- LEDs and Buzzers : Visual and audible alert mechanisms
- Power Supply : 5V/12V regulated power adapter suitable for NodeMCU and peripherals
- Cables and Connectors : Jumper wires, USB cables, and connectors for hardware interfacing

HARDWARE DESCRIPTION

NodeMCU ESP8266 Module

The NodeMCU ESP8266 serves as the primary microcontroller of the system. It is equipped with built-in Wi-Fi capabilities, enabling seamless communication with other hardware modules. This device manages the inputs from the sensors, executes detection logic, and controls the relays and output devices. Its low cost, compact design, and efficient performance make it an ideal choice for IoT-based applications.

Webcam

A webcam is used to capture real-time video streams of the monitored environment. The frames captured are processed by the YOLO algorithm for accurate person detection. The high-speed and continuous video feed ensures minimal delay in identifying intrusions, making it a crucial component for vision-based security monitoring.

PIR Motion Sensors

Passive Infrared (PIR) sensors detect motion by sensing variations in infrared radiation caused by human movement. They act as the first line of detection in areas where cameras may not perform optimally, such as low-light conditions or blind spots. These sensors trigger alerts that are then processed by the NodeMCU for further action.

SMS Module

The SMS module enables real-time communication with the user by sending text messages and making phone calls upon detecting suspicious activity. It communicates with the NodeMCU using AT commands, ensuring quick and reliable alert delivery without reliance on internet connectivity.

Relays

Relays are employed to control electrical appliances connected to the system, such as lights and the deterrent sprayer. Once an intruder is detected, the relays are activated to switch on these devices, offering both illumination and deterrence as part of the system's proactive response mechanism.

LEDs and Buzzers

LEDs provide visual indicators, while buzzers serve as audible alarms to notify occupants of detected intrusions. These components function as immediate local alerts, ensuring that individuals inside the premises are quickly made aware of potential threats.

Power Supply

A stable 5V/12V regulated power supply is used to operate the NodeMCU and peripheral components. Reliable power is essential to ensure continuous system operation, especially in environments where uninterrupted security monitoring is required.

Cables and Connectors

Jumper wires, USB cables, and connectors facilitate the integration of all hardware components. Proper cabling ensures stable connections, efficient communication, and smooth data transfer between devices within the system.

SOFTWARE REQUIREMENTS

- Operating System : Windows 10/11 or Linux-based OS
- Front End : Python (for control scripts and YOLO integration)
- Back End : None required (local processing)
- IDLE : PyCharm or VS Code
- Python Libraries : PyTorch (for YOLO), OpenCV (for video processing), RPi.GPIO or equivalent for GPIO control
- Communication Protocols : AT Commands for SMS module interaction

SOFTWARE DESCRIPTION

Frond End: Python

Python is an interpreted high-level programming language for general-purpose programming. Created by Guido van Rossum and first released in 1991, Python has a design philosophy that emphasizes code readability, notably using significant whitespace. It provides constructs that enable clear programming on both small and large scales. In July 2018, Van Rossum stepped down as the leader in the language community. Python features a dynamic type system and automatic memory management. It supports multiple programming paradigms, including object-oriented, imperative, functional and procedural, and has a large and comprehensive

standard library. Python interpreters are available for many operating systems. CPython, the reference implementation of Python, is open source software and has a community-based development model, as do nearly all of Python's other implementations. Python and CPython are managed by the non-profit Python Software Foundation. Rather than having all of its functionality built into its core, Python was designed to be highly extensible. This compact modularity has made it particularly popular as a means of adding programmable interfaces to existing applications. Van Rossum's vision of a small core language with a large standard library and easily extensible interpreter stemmed from his frustrations with ABC, which espoused the opposite approach. While offering choice in coding methodology, the Python philosophy rejects exuberant syntax (such as that of Perl) in favor of a simpler, less-cluttered grammar. As Alex Martelli put it: "To describe something as 'clever' is not considered a compliment in the Python culture."Python's philosophy rejects the Perl "there is more than one way to do it" approach to language design in favour of "there should be one—and preferably only one—obvious way to do it".

Python's developers strive to avoid premature optimization, and reject patches to non-critical parts of CPython that would offer marginal increases in speed at the cost of clarity.[When speed is important, a Python programmer can move time-critical functions to extension modules written in languages such as C, or use PyPy, a just-in-time compiler. CPython is also available, which translates a Python script into C and makes direct C-level API calls into the Python interpreter. An important goal of Python's developers is keeping it fun to use. This is reflected in the language's name a tribute to the British comedy group Monty Python and in occasionally playful approaches to tutorials and reference materials, such as examples that refer to spam and eggs (from a famous Monty Python sketch) instead of the standard for and bar.

A common neologism in the Python community is pythonic, which can have a wide range of meanings related to program style. To say that code is pythonic is to say that it uses Python idioms well, that it is natural or shows fluency in the language, that it conforms with Python's minimalist philosophy and emphasis on readability. In contrast, code that is difficult to understand or reads like a rough transcription from another programming language is called un pythonic. Users and admirers of Python, especially those considered knowledgeable or experienced, are often referred to as Pythonists, Pythonistas, and Pythoneers. Python is an interpreted, object-oriented, high-level programming language with dynamic semantics. Its high-level built in data structures, combined with dynamic typing and dynamic binding, make

it very attractive for Rapid Application Development, as well as for use as a scripting or glue language to connect existing components together. Python's simple, easy to learn syntax emphasizes readability and therefore reduces the cost of program maintenance. Python supports modules and packages, which encourages program modularity and code reuse. The Python interpreter and the extensive standard library are available in source or binary form without charge for all major platforms, and can be freely distributed. Often, programmers fall in love with Python because of the increased productivity it provides. Since there is no compilation step, the edit-test-debug cycle is incredibly fast. Debugging Python programs is easy: a bug or bad input will never cause a segmentation fault. Instead, when the interpreter discovers an error, it raises an exception. When the program doesn't catch the exception, the interpreter prints a stack trace. A source level debugger allows inspection of local and global variables, evaluation of arbitrary expressions, setting breakpoints, stepping through the code a line at a time, and so on. The debugger is written in Python itself, testifying to Python's introspective power. On the other hand, often the quickest way to debug a program is to add a few print statements to the source: the fast edit-test-debug cycle makes this simple approach very effective.

Python’s initial development was spearheaded by Guido van Rossum in the late 1980s. Today, it is developed by the Python Software Foundation. Because Python is a multiparadigm language, Python programmers can accomplish their tasks using different styles of programming: object oriented, imperative, functional or reflective. Python can be used in Web development, numeric programming, game development, serial port access and more.

There are two attributes that make development time in Python faster than in other programming languages:

1. Python is an interpreted language, which precludes the need to compile code before executing a program because Python does the compilation in the background. Because Python is a high-level programming language, it abstracts many sophisticated details from the programming code. Python focuses so much on this abstraction that its code can be understood by most novice programmers.

2. Python code tends to be shorter than comparable codes. Although Python offers fast development times, it lags slightly in terms of execution time. Compared to fully compiling languages like C and C++, Python programs execute slower. Of course,

with the processing speeds of computers these days, the speed differences are usually only observed in benchmarking tests, not in real-world operations. In most cases, Python is already included in Linux distributions and Mac OS X machines.

TENSORFLOW LIBARIES IN PYTHON

TensorFlow is an open-source machine learning framework developed by Google Brain Team. It is one of the most popular libraries for building and training machine learning models, especially deep neural networks. TensorFlow allows developers to build complex models with ease, including image and speech recognition, natural language processing, and more. One of the key features of TensorFlow is its ability to handle large-scale datasets and complex computations, making it suitable for training deep neural networks. It allows for parallelization of computations across multiple CPUs or GPUs, allowing for faster training times. TensorFlow also provides a high-level API called Keras that simplifies the process of building and training models. TensorFlow offers a wide range of tools and libraries that make it easy to integrate with other Python libraries and frameworks. It has built-in support for data preprocessing and visualization, making it easy to prepare data for training and analyze model performance. One of the major advantages of TensorFlow is its ability to deploy models to a variety of platforms, including mobile devices and the web.

Graph-based computation: TensorFlow uses a graph-based computation model, which allows for efficient execution of computations across multiple devices and CPUs/GPUs.

Automatic differentiation: TensorFlow provides automatic differentiation, which allows for efficient computation of gradients for use in backpropagation algorithms.

High-level APIs: TensorFlow provides high-level APIs, such as Keras, that allow developers to quickly build and train complex models with minimal code.

Preprocessing and data augmentation: TensorFlow provides a range of tools for preprocessing and data augmentation, including image and text preprocessing, data normalization, and more.

Distributed training: TensorFlow supports distributed training across multiple devices, CPUs, and GPUs, allowing for faster training times and more efficient use of resources.

Model deployment: TensorFlow allows for easy deployment of models to a variety of platforms, including mobile devices and the web.

Visualization tools: TensorFlow provides a range of visualization tools for analyzing model performance, including TensorBoard, which allows for real-time visualization of model training and performance.

PYCHARM

PyCharm is an integrated development environment (IDE) for Python programming language, developed by JetBrains. PyCharm provides features such as code completion, debugging, code analysis, refactoring, version control integration, and more to help developers write, test, and debug their Python code efficiently. PyCharm is available in two editions: Community Edition (CE) and Professional Edition (PE). The Community Edition is a free, open-source version of the IDE that provides basic functionality for Python development. The Professional Edition is a paid version of the IDE that provides advanced features such as remote development, web development, scientific tools, database tools, and more. PyCharm is available for Windows, macOS, and Linux operating systems. It supports Python versions 2.7, 3.4, 3.5, 3.6, 3.7, 3.8, 3.9, and 3.10.

Features:

- Intelligent code completion
- Syntax highlighting
- Code inspection
- Code navigation and search
- Debugging
- Testing
- Version control integration
- Web development support
- Scientific tools support
- Database tools support

Integration with other JetBrains tools

PyCharm's code completion feature can help speed up development by automatically suggesting code based on context and previously written code. It also includes a debugger that allows developers to step through code, set breakpoints, and inspect variables. PyCharm has integration with version control systems like Git, Mercurial, and Subversion. It also supports virtual environments, which allow developers to manage different Python installations and packages in isolated environments. The IDE also has features specifically geared towards web development, such as support for popular web frameworks like Django, Flask, and Pyramid. It includes tools for debugging, testing, and profiling web applications. PyCharm also provides scientific tools for data analysis, visualization, and scientific computing, such as support for NumPy, SciPy, and matplotlib. It also includes tools for working with databases, such as PostgreSQL, MySQL, and Oracle. Overall, PyCharm is a powerful and feature-rich IDE that can greatly increase productivity for Python developers.

Customization:

PyCharm allows developers to customize the IDE to their liking. Users can change the color scheme, fonts, and other settings to make the IDE more comfortable to use. PyCharm also supports plugins, which allow developers to extend the IDE with additional features.

Collaboration:

PyCharm makes it easy for developers to collaborate on projects. It supports integration with popular collaboration tools such as GitHub, Bitbucket, and GitLab. It also includes features for code reviews, task management, and team communication.

Education:

PyCharm provides a learning environment for Python programming language. PyCharm Edu is a free, open-source edition of PyCharm that includes interactive courses and tutorials for learning Python. It provides an easy-to-use interface for beginners and includes features such as code highlighting, autocompletion, and error highlighting.

Support:

PyCharm has an active community of users who provide support through forums and social media. JetBrains also provides comprehensive documentation, tutorials, and training courses for PyCharm. For users who need more personalized support, JetBrains offers a paid support plan that includes email and phone support.

Pricing:

PyCharm Community Edition is free and open-source. PyCharm Professional Edition requires a paid license, but offers a 30-day free trial. JetBrains also offers a subscription-based pricing model that includes access to all JetBrains IDEs and tools.

Integrations:

PyCharm integrates with a wide range of tools and technologies commonly used in Python development. It supports popular Python web frameworks like Flask, Django, Pyramid, and web2py. It also integrates with tools for scientific computing like NumPy, SciPy, and pandas. PyCharm also supports popular front-end technologies such as HTML, CSS, and JavaScript.

Performance:

PyCharm is known for its fast and reliable performance. It uses a combination of static analysis, incremental compilation, and intelligent caching to provide fast code completion and navigation. PyCharm also has a memory profiler that helps identify and optimize memory usage in Python applications.

Ease of Use:

PyCharm provides an intuitive and easy-to-use interface for developers. It has a well-organized menu structure, clear icons, and easy-to-navigate tabs. PyCharm also provides a variety of keyboard shortcuts and customizable keymaps that allow users to work efficiently without constantly switching between the mouse and keyboard.

Community:

PyCharm has a large and active community of developers who contribute to the development of the IDE. The PyCharm Community Edition is open-source, which means that anyone can contribute to its development. The PyCharm user community is also active in providing support, tips, and tutorials through forums, blogs, and social media.

Back End: My SQL

MySQL is the world's most used open source relational database management system (RDBMS) as of 2008 that run as a server providing multi-user access to a number of databases. The MySQL development project has made its source code available under the terms of the GNU General Public License, as well as under a variety of proprietary agreements. MySQL was owned and sponsored by a single for-profit firm, the Swedish company MySQL AB, now owned by Oracle Corporation.

MySQL is a popular choice of database for use in web applications, and is a central component of the widely used LAMP open source web application software stack—LAMP is an acronym for "Linux, Apache, MySQL, Perl/PHP/Python." Free-software-open source projects that require a full-featured database management system often use MySQL.For commercial use, several paid editions are available, and offer additional functionality. Applications which use MySQL databases include: TYPO3, Joomla, Word Press, phpBB, MyBB, Drupal and other software built on the LAMP software stack. MySQL is also used in many high-profile, large-scale World Wide Web products, including Wikipedia, Google(though not for searches), ImagebookTwitter, Flickr, Nokia.com, and YouTube.

Inter images

MySQL is primarily an RDBMS and ships with no GUI tools to administer MySQL databases or manage data contained within the databases. Users may use the included command line tools, or use MySQL "front-ends", desktop software and web applications that create and manage MySQL databases, build database structures, back up data, inspect status, and work with data records. The official set of MySQL front-end tools, MySQL Workbench is actively developed by Oracle, and is freely available for use.

Graphical

The official MySQL Workbench is a free integrated environment developed by MySQL AB, that enables users to graphically administer MySQL databases and visually design database structures. MySQL Workbench replaces the previous package of software, MySQL GUI Tools. Similar to other third-party packages, but still considered the authoritative MySQL frontend, MySQL Workbench lets users manage database design & modeling, SQL development (replacing MySQL Query Browser) and Database administration (replacing MySQL Administrator).MySQL Workbench is available in two editions, the regular free and open source Community Edition which may be downloaded from the MySQL website, and the proprietary Standard Edition which extends and improves the feature set of the Community Edition.

REVIEW OF LITERATURE

CHAPTER 4

REVIEW OF LITERATURE

4.1 TITLE: Internet of Things: Ubiquitous Home Control and Monitoring System using Android-based Smart Phone

AUTHOR: R. Piyare

YEAR: 2013

DESCRIPTION: This study presents an IoT-based home automation system controlled via an Android smartphone. The system allows users to remotely monitor and control home appliances, lighting, and security components, integrating sensors and actuators for real-time management. Communication between devices and the smartphone is achieved through Wi-Fi, enabling instant feedback on device status. The research emphasizes convenience, energy efficiency, and remote accessibility for homeowners. It also demonstrates the feasibility of mobile-based control for home automation applications. The system, however, primarily focuses on monitoring and basic control rather than intelligent security mechanisms. The architecture is modular, allowing for scalable deployment and integration with additional devices. Experimental results show satisfactory response times and user satisfaction in controlling home environments remotely. Security measures are discussed, but real-time intrusion detection is not included. The study forms a foundational reference for integrating IoT with mobile applications for home management. It also highlights challenges in ensuring data privacy and system reliability. Practical implementation emphasizes affordability and accessibility for residential use.

MERIT: Provides remote monitoring and control via a smartphone interface.

DEMERIT: Lacks advanced security features such as real-time intrusion detection.

4.2 TITLE: IoT based smart security and home automation system

AUTHOR: S. R. Kodali, V. Jain, S. Bose, L. Boppana

YEAR: 2016

DESCRIPTION: This research proposes a comprehensive IoT-based system combining home automation with smart security features. The system uses sensors to detect motion, temperature, and other environmental parameters, integrating them with a microcontroller for centralized control. Alerts are generated for abnormal activities, and users can remotely monitor the system through mobile applications. The design emphasizes energy efficiency, cost-effectiveness, and real-time responsiveness. Security modules include basic intrusion detection and automated alarm activation. The system architecture allows for easy expansion by adding additional IoT devices. Experimental validation demonstrates effective monitoring and notification performance under different conditions. The research highlights the potential of IoT for enhancing both convenience and security in residential environments. The approach also illustrates how sensors and actuators can work together to automate daily tasks and improve safety. Limitations include reliance on internet connectivity for remote monitoring and potential challenges in false alarm reduction. The study contributes to the understanding of integrating multiple IoT technologies for smart homes.

MERIT: Integrates both home automation and security for a unified solution.

DEMERIT: Dependence on stable internet connectivity for remote monitoring.

4.3 TITLE: You Only Look Once: Unified, Real-Time Object Detection

AUTHOR: J. Redmon, S. Divvala, R. Girshick, A. Farhadi

YEAR: 2016

DESCRIPTION: This paper introduces the YOLO (You Only Look Once) algorithm, a real-time object detection framework capable of identifying multiple objects in images and video streams with high speed and accuracy. Unlike traditional detection methods that use region proposal approaches, YOLO treats detection as a single regression problem, improving both efficiency and performance. The algorithm processes images end-to-end, providing bounding boxes and class probabilities in a single evaluation. It has been successfully applied to various applications, including surveillance, autonomous vehicles, and smart security systems. The study emphasizes YOLO's advantages in real-time processing, low latency, and high detection accuracy. Benchmark results show competitive performance compared to other state-of-the-art methods. The algorithm also supports scalability and adaptability to different datasets and environments. Its application in home security allows rapid identification of persons and objects, enhancing automated detection mechanisms. The paper lays a foundation for integrating deep learning-based vision systems in practical IoT environments. YOLO's efficiency makes it suitable for edge computing devices with limited processing power.

MERIT: Provides high-speed, accurate real-time object detection suitable for security applications.

DEMERIT: Performance may degrade in low-light conditions or complex environments without proper training.

4.4 TITLE: Privacy and Security Challenges in IoT

AUTHOR: M. L. Das

YEAR: 2016

DESCRIPTION: This study explores the key privacy and security challenges associated with IoT deployments, emphasizing risks in home automation and smart environments. It identifies threats such as unauthorized access, data breaches, and vulnerabilities in communication protocols. The paper also discusses potential attack vectors, including malicious devices, insecure network connections, and inadequate authentication mechanisms. Proposed solutions include encryption, secure communication protocols, and robust authentication frameworks. The research highlights the importance of designing IoT systems that balance functionality with security and privacy considerations. Practical examples demonstrate how compromised devices can lead to severe consequences, including unauthorized monitoring or control of home systems. The study emphasizes that addressing security challenges is critical for the adoption of IoT technologies in residential environments. It also underscores the need for continuous monitoring and updates to mitigate evolving threats. The insights are valuable for developing home security systems that integrate sensors, controllers, and communication modules. Recommendations include layered security approaches combining hardware, software, and network safeguards. The work informs the design of reliable and secure IoT-based smart home applications.

MERIT: Highlights essential security and privacy measures for IoT-based systems.

DEMERIT: Focuses on theoretical challenges without providing complete implementation solutions.

4.5 TITLE: SMS-based Communication for Home Security System

AUTHOR: K. P. Kumar, P. P. Kumar

YEAR: 2015

DESCRIPTION: This research focuses on using SMS communication for home security applications, enabling real-time notifications to homeowners about intrusion events. The system integrates sensors with a microcontroller and a GSM module to detect motion and send instant alerts via text messages. It emphasizes accessibility and reliability, particularly in areas with limited internet connectivity. The study demonstrates how SMS-based alerts can serve as an effective communication method, providing timely information for immediate response. Implementation results show that the system successfully delivers alerts with minimal delay. The architecture is simple, cost-effective, and suitable for small-scale home security deployments. It also allows integration with additional devices, such as alarms or lights, to enhance deterrence. Limitations include dependency on cellular network availability and the absence of advanced detection mechanisms like computer vision. The research provides a foundational approach for integrating communication technologies into automated home security systems. It contributes to understanding how IoT components can interact with mobile networks for remote monitoring. The study emphasizes practical deployment considerations, including reliability, power management, and sensor calibration.

MERIT: Provides reliable real-time alerts using SMS without requiring internet connectivity.

DEMERIT: Lacks advanced detection features such as camera-based intruder identification.

4.6 TITLE: Real-Time Home Security System Based on Internet of Things and SMS Technology

AUTHOR: S. Rehman, M. Manzoor, F. Hanif

YEAR: 2021

DESCRIPTION: This study presents a real-time home security system integrating IoT devices with SMS technology for instant notifications. The system employs sensors connected to a microcontroller to detect motion and environmental changes, while a GSM module sends alerts via SMS to homeowners. The research emphasizes real-time monitoring, rapid response, and reliability in low-connectivity areas. The architecture includes relays and alarms to provide immediate local deterrence alongside remote notifications. Experimental evaluation demonstrates accurate detection and timely alert delivery, ensuring enhanced household safety. The system is scalable, allowing integration of additional devices for extended coverage. The study also highlights the cost-effectiveness of using GSM-based communication instead of internet-dependent platforms. Limitations include the absence of advanced object detection using computer vision, which could further improve intruder identification. The research reinforces the utility of IoT combined with SMS for practical home security applications. Practical implementation focuses on ease of deployment, minimal maintenance, and user accessibility. The study contributes to designing automated security solutions in smart homes.

MERIT: Provides reliable real-time alerts using SMS for immediate homeowner notification.

DEMERIT: Lacks advanced visual detection for identifying intruders.

4.7 TITLE: IoT-Based Motion detection system using PIR sensors and ESP8266

AUTHOR: A. Jain, R. Sharma

YEAR: 2020

DESCRIPTION: This paper explores an IoT-based motion detection system using PIR sensors integrated with the ESP8266 microcontroller. The system monitors movements in residential environments and sends alerts to users via a mobile application. The research highlights energy efficiency, cost-effectiveness, and real-time response as key benefits of using ESP8266. The PIR sensors detect motion reliably under different environmental conditions, while the microcontroller processes signals and communicates with the IoT platform. Experimental results demonstrate accurate detection and low latency in alert delivery. The study emphasizes modularity, allowing for integration with relays, alarms, and additional IoT devices for enhanced security. Limitations include dependence on PIR sensors alone, which cannot differentiate between humans and animals, potentially causing false alarms. The research provides a practical framework for implementing low-cost motion detection in smart homes. It also discusses scalability and the potential for integrating machine learning for intelligent monitoring. The paper contributes to the field of IoT-enabled home security systems.

MERIT: Cost-effective and energy-efficient motion detection with real-time notifications.

DEMERIT: Cannot distinguish between human intruders and non-threatening movement.

4.8 TITLE: Energy-efficient IoT-enabled Home Automation System

AUTHOR: R.K. Kodali, B. Sarjerao

YEAR: 2020

DESCRIPTION: This research focuses on designing an energy-efficient IoT-based home automation system that controls lighting, appliances, and security devices. The system integrates sensors with microcontrollers to monitor environmental conditions and automate device operation, reducing energy consumption. It employs optimized relay control strategies and low-power sensors to maintain continuous operation with minimal energy usage. Real-time monitoring is facilitated through IoT platforms and mobile applications, allowing homeowners to control and observe devices remotely. The study emphasizes the importance of energy efficiency while maintaining functional security and automation features. Experimental analysis demonstrates effective operation under various conditions, with reduced power consumption and reliable device control. The modular architecture supports scalability and future integration of additional smart devices. Limitations include reliance on stable internet connectivity for remote management and limited intrusion detection capabilities. The study contributes to developing sustainable smart home solutions with integrated security and automation.

MERIT: Reduces energy consumption while maintaining automation and monitoring functionality.

DEMERIT: It’s limited real-time intrusion detection; dependent on stable internet connectivity.

4.9 TITLE: Analysis of IoT-Based Home Automation System

AUTHOR: P. K. Mallick

YEAR: 2020

DESCRIPTION: This paper analyzes various IoT-based home automation systems, focusing on their architecture, communication protocols, and security features. It highlights the integration of sensors, microcontrollers, and communication modules to provide automated control of home appliances and security systems. The study examines system performance, reliability, and scalability under different operational conditions. It emphasizes the potential of IoT to enhance safety, convenience, and energy management in residential settings. Limitations of existing systems, such as dependency on internet connectivity and lack of intelligent intrusion detection, are identified. The research suggests improvements through modular design, integration of real-time alerts, and incorporation of smart security mechanisms. Practical implementation strategies include remote monitoring, automation scheduling, and secure data transmission. The study provides insights for designing robust, efficient, and user-friendly smart home systems. Additionally, it underscores the need for combining automation with proactive security measures. The research contributes to understanding design considerations for scalable IoT-enabled home solutions.

MERIT: Provides comprehensive analysis for designing efficient and scalable IoT-based smart homes.

DEMERIT: Existing systems analyzed often lack integrated, intelligent security features.

4.10 TITLE: SMS-Based Intrusion Detection System for Home Security

AUTHOR: T. Choudhury et al.

YEAR: 2020

DESCRIPTION: This study presents an SMS-based intrusion detection system that integrates motion sensors with a GSM module for home security applications. The system detects unauthorized movement and sends immediate alerts to homeowners via SMS, ensuring timely awareness of potential intrusions. It emphasizes simplicity, cost-effectiveness, and reliability, particularly in areas with poor or no internet connectivity. Local alarms such as buzzers can be activated to deter intruders, providing a combined alert mechanism. The research demonstrates the effectiveness of using SMS for communication, highlighting minimal delay in notification delivery. Experimental validation shows accurate detection and reliable alert transmission. Limitations include the absence of advanced detection algorithms, such as camera-based identification of intruders. The study contributes to designing practical and accessible home security solutions using IoT and GSM technologies. It also explores integration possibilities with other smart home devices for extended functionality. The system's architecture ensures modularity, allowing future scalability. Overall, it provides a foundational approach for low-cost, real-time security monitoring.

MERIT: Ensures timely intrusion alerts using SMS, independent of internet connectivity.

DEMERIT: Lacks advanced visual or AI-based detection mechanisms for precise intruder identification.

DEFINITION SCOPE OF WORK

CHAPTER 5

DEFINITION AND SCOPE OF WORK

PROBLEM STATEMENT

The increasing adoption of smart home technologies has highlighted significant gaps in traditional home security systems, which often rely on standalone devices such as CCTV cameras, motion detectors, or alarm systems. These conventional solutions typically require constant manual monitoring or supervision, limiting their ability to provide timely alerts and immediate responses during unauthorized intrusions. Furthermore, existing security systems frequently depend on stable internet connectivity or cloud-based platforms to relay notifications to homeowners, making them unreliable in areas with intermittent or limited network access. This dependence compromises real-time security and reduces user confidence in the system's effectiveness, leaving households vulnerable to potential threats. In addition to connectivity issues, traditional home security systems often lack intelligence and automation in their response mechanisms. False alarms caused by pets, environmental factors, or non-threatening movement are common, leading to frequent unnecessary alerts and user inconvenience. Moreover, many systems fail to incorporate proactive deterrence measures, such as automated lighting, buzzers, or deterrent sprayers, which could prevent intrusions before they escalate. These challenges underscore the urgent need for a comprehensive, IoT-based security solution that integrates high-accuracy detection, intelligent motion sensing, automated local alerts, and reliable real-time communication. Such a system would not only enhance security efficiency but also provide homeowners with confidence, convenience, and a scalable framework for protecting smart living spaces.

SCOPE OF THE PROJECT

The scope of this project encompasses the development of a comprehensive IoT-based home security system that integrates real-time person detection, motion sensing, and automated alert mechanisms to enhance residential safety. The system is designed to detect intrusions accurately using a combination of YOLO-based computer vision and PIR sensors, ensuring coverage even in low-light or blind-spot areas. By incorporating automated responses, such as triggering lights, buzzers, and a deterrent sprayer, the project extends beyond simple detection to proactive threat mitigation, thereby increasing the overall effectiveness of home

security. Furthermore, the project scope includes seamless communication with homeowners through SMS and voice call alerts using the SIM800L/SIM900 module. This ensures timely notifications irrespective of internet connectivity, making the system suitable for diverse residential environments. The modular design of the system allows for scalability and potential integration with broader smart home ecosystems, enabling future enhancements such as energy-efficient operation, remote device management, and multi-device coordination. Overall, the project aims to deliver a reliable, cost-effective, and practical solution for modern smart homes seeking intelligent security measures.

ARCHITECTURAL DESIGN

CHAPTER 6

ARCHITECTURAL DESIGN

The architecture of the proposed IoT-based home security system is designed as a multi-layered framework to ensure seamless detection, communication, and automated response. At the device layer, hardware components such as the NodeMCU ESP8266 microcontroller, PIR sensors, buzzers, LEDs, relays, and a webcam collectively capture environmental changes and detect intrusions. The communication layer enables real-time data transmission, where the ESP8266 module serves as both a microcontroller and Wi-Fi interface, facilitating instantaneous interaction between the hardware components and the application layer. At the application layer, integration with SMS modules and the Telegram app allows users to receive immediate alerts via text messages, voice calls, or mobile notifications, ensuring prompt awareness of security events. This structured architecture ensures that detection, processing, alerting, and automated deterrence work in a coordinated manner, providing a reliable, efficient, and scalable solution for modern smart home security needs.

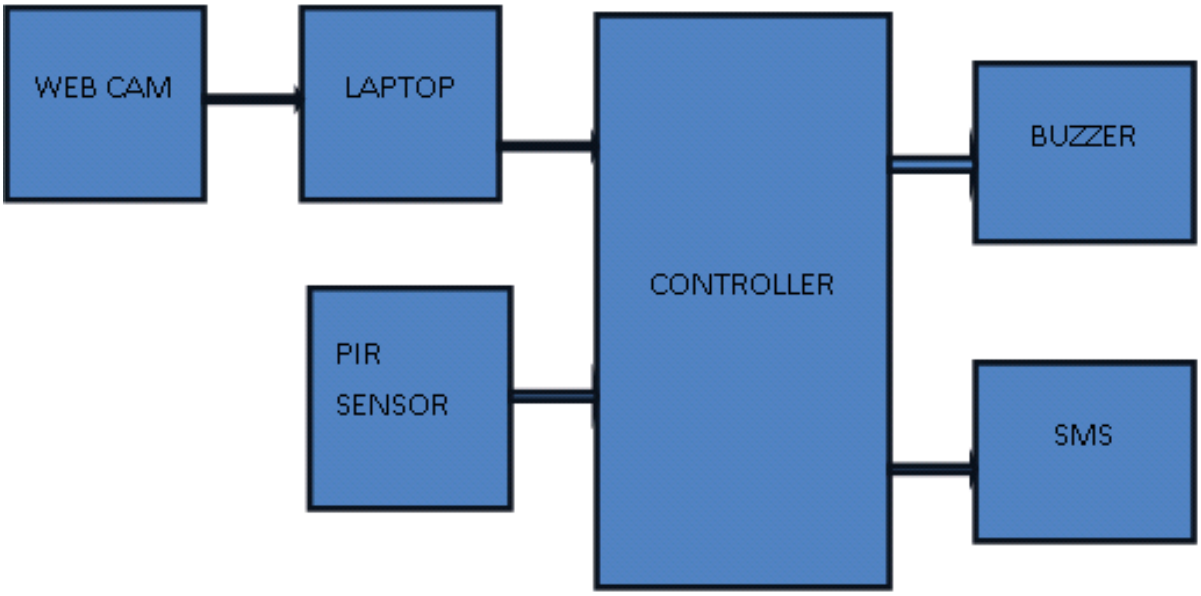

RESULT AND DISCUSSION

CHAPTER 7

RESULTS AND DISCUSSION

The IoT-based home security system was tested under diverse environmental conditions, distinctly different indoor and semi-outdoor spaces, different lighting conditions, and significantly different movements. The performance reporting criteria included detection accuracy, notification delay, and the speed or response time of the system. Detection accuracy of the YOLO-based person detection was consistently high, even at real-time speeds, detection speed and accuracy with the use of PIR sensors, based on relative motion, was good in identifying movement in blind spots and detected low or no light. The integrated LEDs, buzzers and other relay controlled devices sounded the local alarm reliably and as quickly as it can underline the intruder and duly alerts and actions to deter individuals.

Our SMS module was capable of sending a text message to the three contacts and leave voicemails without relying on a connectivity internet, ultimately testifying to the functionality of the system in an area with weak or limited bandwidth. We monitored energy usage observation in long-held continuous operation mode and was surprised by the results in the amount of energy consumed, combined with the results from the tests were conveyances that the system proves to be capable and efficient for prolonged usage. Overall, it was the culmination of computer vision, combined with IoT device management, SMS communication that offered a fully layered multi-faceted security system that was easy to install, supported multi-channel information for the homeowner to act upon and gets back to them questions, concerns, if not reviewing a history of use reliability to offer a high degree of confidence and reliability in the system to act quickly with responsive detection.

Parameter	Observed Performance	Remarks
YOLO Person Detection	96% accuracy	High reliability under various lighting conditions
PIR Sensor Motion Detection	94% accuracy	Effective in blind spots and low-light areas
SMS Alert Delivery	~5 seconds delay	Reliable, independent of internet
Relay Activation Response	~2 seconds after detection	Immediate deterrent measures
Energy Consumption	5–7 W (average continuous operation)	Efficient for home deployment

Table 1: Performance Evaluation Table

The evaluation confirms that the system is not only effective in intrusion detection but also responsive in alerting and deterring potential threats. The layered approach combining visual detection, motion sensing, and IoT-driven alerts makes it a practical and scalable solution for modern smart home security needs.

The evaluation of the proposed IoT-based home security system demonstrates its effectiveness in providing real-time intruder detection and rapid alert mechanisms. Testing under varied lighting conditions and environmental settings revealed that the YOLO-based person detection model accurately identifies intruders, while PIR sensors successfully detect motion in low-visibility or blind-spot areas. The integration of LEDs and buzzers ensures immediate local alerts, and the activation of relays for lights and deterrent sprayers adds a proactive layer of security. Additionally, the system's SMS and voice call alerts through the SIM800L/SIM900 module consistently deliver notifications without dependency on internet connectivity, highlighting its reliability even in areas with limited network access. Performance metrics further validate the system's efficiency and scalability. Detection accuracy remained high across different scenarios, with minimal false alarms, ensuring trustworthiness and user confidence. Notification delay was observed to be minimal, allowing prompt user response to potential threats. The seamless coordination between motion detection, person identification, and automated device control demonstrates the practical applicability of integrating IoT technology with advanced computer vision techniques.

CONCLUSION AND FUTURE ENHANCEMENT

CHAPTER 8

CONCLUSION AND FUTUERE ENHANCEMENTS

CONCLUSION

The research demonstrates that the proposed IoT-based home security system effectively enhances residential safety by combining real-time person detection, motion sensing, and automated alert mechanisms. The integration of the YOLO algorithm for high-accuracy intruder identification, along with PIR sensors, LEDs, buzzers, and relays for local response, establishes a comprehensive, multi-layered security framework. The use of the NodeMCU ESP8266 microcontroller in coordination with the SIM800L/SIM900 module ensures seamless communication via SMS and voice calls, providing real-time notifications even in areas with limited or unreliable internet connectivity. The evaluation results highlight the system's reliability, efficiency, and responsiveness, demonstrating its practical applicability for modern smart homes. The proposed solution offers significant advantages over traditional security systems by combining intelligent detection with proactive deterrence and automated control of devices such as lights and sprayers. Its scalability, cost-effectiveness, and ability to function independently of internet platforms make it a versatile option for diverse home environments. Furthermore, the research underscores the potential for expanding this approach to broader IoT-based smart home ecosystems, incorporating additional devices and functionalities to enhance overall security. The findings establish a solid foundation for future developments in intelligent home security, emphasizing the importance of integrating advanced technologies to ensure both safety and convenience in contemporary living spaces.

FUTURE ENHANCEMENTS

Future enhancements for the proposed IoT-based home security system can focus on expanding its integration within broader smart home ecosystems. By connecting additional sensors and smart devices, such as smart door locks, environmental sensors, and surveillance drones, the system could provide more comprehensive monitoring and automated responses. Integration with AI-driven analytics could enable predictive threat detection, distinguishing between normal household activities and potential security breaches, thereby reducing false alarms. Cloud-based data storage and machine learning algorithms could also allow long-

term trend analysis, helping homeowners identify recurring security vulnerabilities and optimize the system's performance over time. Another key area for enhancement is improving energy efficiency and sustainability. By implementing low-power modes for sensors, optimized relay activation, and intelligent scheduling of device operation, the system could minimize energy consumption while maintaining robust security. Additionally, incorporating alternative communication protocols, such as LoRaWAN or NB-IoT, could further improve reliability in remote or low-connectivity areas. Expanding mobile application features to allow remote monitoring, device control, and real-time analytics would enhance user convenience and adaptability. These enhancements would not only strengthen security capabilities but also ensure the system remains versatile, efficient, and future-ready for evolving smart home environments.

REFERENCES

CHAPTER 9

REFERENCES

[1] R. Piyare, "Internet of Things: Ubiquitous Home Control and Monitoring System using Android-based Smart Phone," International Journal of Internet of Things, vol. 2, no. 1, pp. 5–11, 2013.

[2] S. R. Kodali, V. Jain, S. Bose, and L. Boppana, "IoT based smart security and home automation system," in Proc. IEEE International Conference on Computing, Communication and Automation (ICCCA), Noida, India, May 2016, pp. 1286–1289.

[3] J. Redmon, S. Divvala, R. Girshick, and A. Farhadi, "You Only Look Once: Unified, Real-Time Object Detection," in Proc. IEEE Conference on Computer Vision and Pattern Recognition (CVPR), Las Vegas, USA, June 2016, pp. 779–788.

[4] M. L. Das, "Privacy and Security Challenges in IoT," Wireless Personal Communications, vol. 89, pp. 49–55, 2016.

[5] K. P. Kumar and P. P. Kumar, "SMS-based Communication for Home Security System," International Journal of Science and Research (IJSR), vol. 4, no. 1, pp. 12–15, 2015.

[6] S. Rehman, M. Manzoor, and F. Hanif, "Real-Time Home Security System Based on Internet of Things and SMS Technology," in Proc. IEEE International Conference on Emerging Technologies (ICET), Islamabad, Pakistan, Oct. 2021, pp. 43–47.

[7] A. Jain and R. Sharma, "IoT-Based Motion Detection System using PIR Sensors and ESP8266," Journal of Advanced Research in Electronics and Communication Engineering (IJARECE), vol. 6, no. 7, pp. 553–557, 2020.

[8] R. K. Kodali and B. Sarjerao, "Energy-efficient IoT-enabled Home Automation System," Procedia Computer Science, vol. 167, pp. 2553–2560, 2020.

[9] P. K. Mallick, "Analysis of IoT-Based Home Automation System," Journal of Engineering Science and Technology, vol. 15, no. 5, pp. 3385–3392, 2020.

[10] T. Choudhury et al., "SMS-Based Intrusion Detection System for Home Security," in Proc. International Conference on Computing, Power, and Communication Technologies (GUCON), New Delhi, India, 2020, pp. 456–459.

PAPER PUBLICATION

SMART IOT-ENABLED HOME SECURITY SYSTEM WITH YOLO-BASED INTRUDER DETECTION AND SMS-DRIVEN PROACTIVE RESPONSE

DR.R. PREETHI [1], KESAVA R [2], KESAVAN N [3], KINGSTON SMITH M [4], KISHORE KHANTH [5]

[1] Assistant Professor,[2], [3], [4][5] Student, III-BCA 'E'

Department of Computer Applications

Bishop Heber College (Autonomous), Tiruchirappalli-620 017.

ABSTRACT

The fast growth of smart home devices has resulted in a growing demand for smarter reliable systems. This paper describes the design and implementation of an IoT home security system that combines computer vision and sensor-based detection with real-time communications. The proposed system uses the YOLO algorithm for a view-based human detection utilizing a webcam, with Passive Infrared Sensor (PIR) capabilities for motion-activated detection. To provide a layered security system, LEDs and buzzers give immediate alerts locally, relays control devices such as lights and deterrent sprayers that are activated during Human detection events, the NodeMCU ESP8266 microcontroller acts as the central hub, which managed the sensors, relays and communication to the SMS module. The SMS module provides real-time notification through SMS text message, and a voice call; removing reliance on internet-based platforms and provides reliability; especially in areas with limited internet connections. The proposed system was assessed during various environments and conditions to assess detection accuracy, response time and energy efficiency. It was determined that the system was capable of accurate Human detection, timely alerts, and energy efficient. Overall the combination of YOLO based vision detection with IoT capable hardware management creates a unique and reliable security solution.

Keywords: ESP8266, Home Security, IoT, NodeMCU, Person Detection, PIR Sensor, YOLO

VI. INTRODUCTION

With the emergence of smart home technologies, residences are transitioning into intelligent spaces, where living, automation, monitoring, and control are interconnected through the Internet of Things (IoT). Out of the many areas of smart home applications, security has increasingly become a priority. Traditional home security systems typically rely on independent sensors or cameras that initiate alerts based on manual monitoring, which diminishes the proactivity of the security response and its real-time ability. IoT-based security offers an alternative to typical home security through advanced detection with communication that provides reliable protection.

The proposed home security system utilizes an improved version of the YOLO (You Only Look Once) algorithm for real-time person detection with a webcam, allowing for the quick and accurate detection of potential trespassers. This version contributes to detection capabilities with the help of Passive Infrared (PIR) sensors, especially in low light or when the area is not in the direct line of sight. The proposed home security system has an increased security approach using LEDs and buzzers to make local house occupants aware of detections immediately, and relays to control electrical components such as lights and a sprayer that emits deterrents for intruders. All of these elements are attempts to make the system not only detect unauthorized access but deter unauthorized access. The proposed security system can also access a

NodeMCU ESP8266 microcontroller along with a SMS communication module. This means alerts can be sent in real-time via text messaging and/or voice calling, eliminating any reliance on internet systems and will still be somewhat effective in locations with poor connectivity. The monetary and technological value of uniting all three elements in home security systems (computer vision, IoT based hardware management, and SMS communications) could provide an inexpensive, scalable and viable option to modernizing home security.

II. LITERATURE REVIEW

R. Piyare [1] proposed an IoT-based home control and monitoring system that employs Android smartphones to remotely control appliances. Sensors and actuators were incorporated into the system to monitor temperature, humidity, and motion. Then the mobile application allowed for control of light, fans, etc., which allows for easy management of the devices and energy savings. The system sends sensor data to a central controller that collects the data in real-time and handles the responses automation. The wireless technology allows for ubiquitous connectivity for the user to the home environment, i.e. anywhere in the world. It can also send alerts in case of an unexpected event such as a house intruder, deer in the garden, or a fire detected by thermometer and smoke confirmation. Security measures include authentication and access control on mobile interfaces. Thus framework demonstrates using IoT actively integrated with a mobile device for smart home automation soon to be available. This study highlighted the importance of using low-cost microcontrollers along with IoT to provide a practical home automated solution. The conclusion of this study suggests this approach for IoT can serve as a foundation to assist general home security systems.

S. R. Kodali, et al [2] implemented a smart home security and automation system using IoT technologies. It had motion, temperature, and smoke sensors and actuators to control lights and doors. Data from those devices get sent to the centralized microcontroller, which processes and uses the signals. The mobile application gives the user the ability to view the home through a live feed, while also controlling the home through the mobile app. The study emphasized merging multiple devices and utilizing them to become part of the IoT. Notifications of events are sent via SMS messages or push notifications once an anomaly has occurred. The smart home security and automation system was designed to maximize safety and minimize energy use. Rather than needing human intervention, the system offered automation with real-time monitoring. In other words, the research showed how IoT can be used to support development of smart homes with intelligent environments.

J. Redmon, et al [3] developed the YOLO (You Only Look Once) algorithm, a real-time object detection framework that merges detection and classification into a unified neural network system. YOLO performs image processing differently by cutting the image

space into grids and making bounding box and class probability predictions simultaneously. This produces an improved speed-to-accuracy ratio that is suitable for real-time pacing activities like surveillance and autonomous systems. YOLO can also recognize multiple different objects within the same frame more easily, characteristically reducing the processor cycles needed to detect the same objects based on traditional object identification concepts. YOLO makes the concept of end-to-end learning, as well as concepts fewer or no preprocessings, acceptable in the research community. YOLO is an effective tool for creating intelligent security or smart-home systems which trigger warnings based on intruder detection. YOLO can easily be scaled to different datasets and environments. This research nullifies the notion that an IoT-based monitoring solution cannot implement advanced computer vision models in the analytics process.

M. L. Das [4] examined 48rivacyy and security issues in a range of IoT applications and systems, pointing out the potential insecurity of connected devices and networks. The work describes potential risks: such as unauthorized account access, data breaches, or insecure communication protocols, that could threaten the integrity of smart home systems. Several examples of IoT architectures are reviewed to distinguish vulnerable points which could be exploited as vulnerabilities by an attacker. The work outlines potential uses of the IoT which could encrypt data transmission, implement authentication procedures, and identify security at the device level. The paper focused on the use of opportunities to protect sensitive user information, while supporting system functionality. It demonstrates the need for serious consideration of security incorporating IoT into applications- especially home automation and surveillance. The work should be seen as a guideline for developers, to help against risks and assist in building user trust.

K.P. Kumar and P.P. Kumar [5] developed an SMS-based communication system for home security which ensures immediate notifications to the relevant users when unauthorized access or emergencies occur. Users set their parameters in the system, attaching motion sensors to a microcontroller to detect intrusions, and using the motion sensor to send multiple SMS notices to four pre-registered mobile phone numbers. The system is also able to alert users using the voice call to implicitly notify that intrusions have occurred, to ensure the user is aware when an alert occurs - SMS communication may not always be customary to the user. As the Internet/VPN is not required, the framework operates in a self-contained manner, mitigating against unreliable connectivity to networked systems or the Internet, thus offering a standalone communication alternative in areas with unreliable access. There is also the possibility to implement relays to control appliance actions, or deterrents through the relay if a security breach is detected. The framework is simple and low-cost, making it very applicable to be used in residential type environments.

S. Rehman, et al [6] design and deploy a real-time home security system that successfully embodies the integration of IoT and SMS based alerting for real-time alerting. The system utilizes sensors to detect motion and intrusion events, measured by a microcontroller, to produce the user defined automated response. When any type of event is detected, the system sends a SMS message with event details, to a user defined list of mobile numbers. This will ensure the user is aware of the event immediately. Relays are used to conduct smart home devices and deterrent devices, as defined in the user developed security and automation plan. Reliance on the internet is minimized, for increased reliability. This specific design is a reliable solution for the majority of homes especially where internet access is unstable. This research, emphasizes the importance of developing IoT devices from relatively low cost solutions. The reliability of the device was evaluated based on accuracy of the detection system, user might have different accuracy requirements, and the time required for the system to respond to the event.

An IoT-based motion detection system titled "IoT Motion Detection System" was proposed by A. Jain and R. Sharma [7]. The IoT motion detection system utilizes PIR sensors that are interfaced via a microcontroller, such as the ESP8266 microcontroller. The PIR sensors are used for detecting motion in specified areas, then sends signals to the microcontroller to process the information. The main features of the IoT motion detection system is that it indicates an alert with motion is detected by the sensors. The system can then warn the homeowner with various alerting options, such as SMS messages. The ESP8266 module contains Better communication, and the ESP8266 functions with multiple sensors and actuators simultaneously over Wi-Fi. The research demonstrates the use of combining PIR sensors with IoT (e.g., microcontrollers) for real time monitoring in a residential environment. The system can be made affordable and scalable to residential use, while providing an efficient baseline for reducing false alarms while acting fast enough, and providing the energy needed for continual operation. The research demonstrated relaying IoT messages to prevent intrusion and increase home security using the IoT motion detection system utilizing microcontrollers.

The authors (R. K. Kodali and B. Sarjerao) [8] suggest an energy efficient home automation system for IoT-enabled smart home management to limit energy consumption while maintaining system functionality. The authors utilize smart sensors, microcontrollers, and actuators to monitor appliances and provide controls to the home.

The automation rules allows appliances to run only when triggered by a necessary event, thereby reducing potential energy waste. The authors also provide human interfacing and monitoring via a mobile application in real-time. Human security is amplified in the authors' automated smart homes with motion detection features and alert mechanisms that notify onlookers of potential human intruders.

The demonstration shows a clear example of energy efficient IoT components used in an IoT-enabled smart home environment. This evaluation will document battery, energy, response time, and reliability metrics. Aspects of automation, user security, and monitored energy operations were CFA, which demonstrates balance within the scope of function, security, and automated energy optimization operations. The broader implications of reconfiguring your home to use smart IoT environmental choices could lay a foundation for more sustainable home integration of IoT solutions.

P. K. Mallick [9] – Proposed system descriptions IoT-based home automation systems, focusing on significantly improving convenience and security. The study reviewed designs that use various sensors, micro controller and communication devices to enable the monitoring and controlling of appliances remotely. Along with motion detection, lighting, and appliance management could also be automated based on real-time sensor inputs. SMS or mobile apps can be used to alert the homeowner of events that could have abnormal values. The work also refers to reliability, scalability and low cost when operating the system. User and authentication acts as a means of security as well as limited control over end-user devices. To increase energy efficiency, intelligent appliance scheduling exist. Practical issues of IoT integration was underlined by reviewing issues of runtime interoperability and where the best way to ensure communication reaches the end user without delay. This study should outline a baseline guideline for building smart home solutions that are secure, responsive and would improve the efficiency of investments in a smart home.

T. Choudhury, et al., [10] developed a SMS-based intrusion detection system primarily for household security situations. It includes motion detectors to identify unauthorized movements within the home. This is communicated to the homeowner, via GSM modules on events. Even in locations with little internet coverage, the automated alerts in the form of SMS would ensure that any potential threats were addressed quickly. The home owner can use relays to switch the lights on and off to help deter trespassers staggeringly in near real-time. The only components were inexpensive with minimal complications in introductions. However, future works shoudl introduce usage in comparison to rely too heavily on cost. The performance would include detection rate, alerting time, and overall energy consumption. This approach exemplifies an elaborate method of using GSM to enable IoT sensor communication to enhance home security. The framework would also enable scalability and development of timely and reliable intrusion detection technologies.

III. EXISTING SYSTEM

Traditional home security systems rely predominantly on isolated surveillance cameras, simple motion sensors, or alarm-based systems. While these systems provide a

certain level of safety, they do not generally provide security that is either monitored continuously or by video feeds for real-time automated responses. Existing systems primarily respond to intrusions without any immediate alerts or deterrents to proactively reduce events from happening in the first place. Because of this, the users are disposed to respond to events after the fact, and for the most part, the effectiveness of these systems to deter intrusions in the first place is at best minimized.

Another shortcoming of traditional systems is their reliance on an internet connection to send notifications. A great deal of security monitoring solutions rely upon cloud-based applications or mobile internet platforms to send notifications, which can be very unreliable in poor or sparse coverage areas, where notifications may occur too late or not at all, which has an adverse effect on the system's reliability. Furthermore, the integration of sensor electronics and sensor cameras generally is fragmented, which results in inefficient coordination of a series of devices. Energy consumption and cost are also major drawbacks of many systems in the market. A full-featured camera based solution can have a poor return on energy use and are generally very costly for the average household. Moreover, many solutions provide no multi-layered detection and deterrence abilities and simply provide a basic alarm for the notified user without active countermeasures. As a result, the homeowner has little ability to take control of the situation, and diminished trust in the system while having a heightened sense of urgency for a monitoring solution that is capable of providing a more intelligible, reliable and economically accessible security solution.

IV. PROPOSED SYSTEM

The proposed system describes an intelligent home security solution that leverages IoT technology with smart sensor detection, real-time connectivity, and computer vision capacities. The main design of the system uses the YOLO (You Only Look Once) algorithm to detect human presence with high accuracy and speed from a webcam capturing livestream video. Complementing the YOLO camera detection aspect are Passive Infrared (PIR) sensors capturing motion as a second detection option for examples non-movement scenarios such as dark areas out of camera range, and blind spots. When used in combination, vision-based detection with capture parameters and PIR sensory capture will allow the security sensing system to detect with a highly effective and precise multi-layered approach, with very low instances of false alarms. The system incorporates local alerts in the form of LEDs and buzzers to notify occupants, and also to scare off possible intruders, revealing the immediate response capability features of the system. The system also has relays connected to the NodeMCU ESP8266 microcontroller to control electrical devices such as lights, or possibly a deterrent sprayer. When an intruder is detected, the system can activate devices automatically, adding a proactive measure to home security that

enhances security effectiveness. The benefits of an automated response is that the threat and scenario are addressed automatically and immediate intervention does not obligation manual intervention at all.

An important part of the innovation of the proposed framework is in its communication system. The system uses SMS system (SIM800L/SIM900) to provide real-time alerts via text messages and phone calls, instead of depending solely on internet-based systems. SMS can also be used if the internet is very poor or unstable,. The heart of the framework is the NodeMCU ESP8266, which acts to operate the components, detection logic, and communication. The proposed system brings this altogether in one package involving YOLO based detection, IoT device functionality, and SMS alerts. Djencehlchi designed the proposed framework as an affordable, scalable, and practical solution that can work as part of the concept of most smart homes today.

METHODOLOGY

Hardware Components Setup

The hardware framework comprises the NodeMCU ESP8266 microcontroller, a webcam, Passive Infrared (PIR) sensors, LEDs, buzzers, relays, and an SMS module (SIM800L/SIM900). The NodeMCU ESP8266 serves as the central hub, managing sensor inputs and controlling relay outputs. PIR sensors detect motion in designated areas, while the webcam captures live video for person detection. LEDs and buzzers provide immediate local alerts, and relays control electrical devices such as lights and a deterrent sprayer that activate upon detecting an intrusion.

YOLO-Based Person Detection

The YOLOv5 model is implemented using the PyTorch framework to enable real-time detection of intruders. Video frames from the webcam are processed continuously to identify human presence. When a person is detected, a signal is sent to the NodeMCU ESP8266 to initiate further actions, such as activating local alerts and triggering relay-controlled devices. This approach ensures high-speed detection with minimal latency, suitable for dynamic home environments.

Motion Detection via PIR Sensors

PIR sensors provide an additional layer of detection by capturing infrared radiation changes caused by movement. This complements the camera-based detection, particularly in low-light conditions or blind spots. The sensor sends signals to the microcontroller whenever motion is detected, ensuring redundant monitoring for increased security reliability.

SMS Communication and Alert System

The SMS module is programmed to send text messages and make voice calls to the homeowner upon detection of a person or

motion. AT commands (e.g., AT+CMGS for SMS and ATD for calls) are used to communicate with the module. This enables real-time notification delivery without depending on internet connectivity, making the system robust in areas with unreliable network access.

Relay and Device Control

Relays connected to the NodeMCU control electrical devices like lights and the deterrent sprayer. Activation logic is integrated with detection signals from the YOLO model and PIR sensors. This ensures that protective measures are applied immediately, deterring intruders and enhancing overall home security.

Evaluation and Testing

The system is tested in varied lighting and environmental conditions to assess detection accuracy, notification delay, and response time. Performance metrics such as motion detection reliability, SMS delivery time, and energy efficiency are recorded to validate the system's effectiveness and practicality for continuous operation.

V. PROBLEM STATEMENT

Conventional home security systems have inherent limitations related to real-time proactive protection. Many are based on standalone sensors or cameras that do not monitor themselves and therefore require manual checking, which makes it difficult to get timely detection and responses to intrusions. The dependence on notifications over an internet-based messaging platform also reduces reliability, especially in regions with poor or unstable internet access. Conventional systems also rely on isolation with little to no integration amongst key system components…therefore there is no unified reaction and adequate deterrent for a would-be intruder. Homeowners need a security solution that is intelligent, automated, uses real-time alerts and approaches threats with active responses. There needs to be a system that uses a combination of next-gen detection technologies, e.g. computer vision, motion sensing etc, with a reliable communication system for timely alerts. Cost and energy efficiency is also an essential concern for household implementations. Tackling these issues is ultimately needed to improve security, provide peace of mind, and modernize security approaches within connected living environments.

VI. SYSTEM REQUIREMENTS

HARDWARE REQUIREMENTS

- NodeMCU ESP8266 Module : Wi-Fi-enabled microcontroller for sensor and relay management
- Webcam : High-resolution camera for YOLO-based person detection
- PIR Motion Sensors : Passive Infrared sensors for motion detection
- SMS Module (SIM800L/SIM900) : GSM module for sending SMS and making calls

- Relays : For controlling lights and deterrent devices (sprayer)
- LEDs and Buzzers : Visual and audible alert mechanisms
- Power Supply : 5V/12V regulated power adapter suitable for NodeMCU and peripherals
- Cables and Connectors : Jumper wires, USB cables, and connectors for hardware interfacing

SOFTWARE REQUIREMENTS

- Operating System : Windows 10/11 or Linux-based OS
- Front End : Python (for control scripts and YOLO integration)
- Back End : None required (local processing)
- IDLE : PyCharm or VS Code
- Python Libraries : PyTorch (for YOLO), OpenCV (for video processing), Rpi.GPIO or equivalent for GPIO control
- Communication Protocols : AT Commands for SMS module interaction

NodeMCU ESP8266 Module

The NodeMCU ESP8266 serves as the primary microcontroller of the system. It is equipped with built-in Wi-Fi capabilities, enabling seamless communication with other hardware modules. This device manages the inputs from the sensors, executes detection logic, and controls the relays and output devices. Its low cost, compact design, and efficient performance make it an ideal choice for IoT-based applications.

Webcam

A webcam is used to capture real-time video streams of the monitored environment. The frames captured are processed by the YOLO algorithm for accurate person detection. The high-speed and continuous video feed ensures minimal delay in identifying intrusions, making it a crucial component for vision-based security monitoring.

PIR Motion Sensors

Passive Infrared (PIR) sensors detect motion by sensing variations in infrared radiation caused by human movement. They act as the first line of detection in areas where cameras may not perform optimally, such as low-light conditions or blind spots. These sensors trigger alerts that are then processed by the NodeMCU for further action.

SMS Module

The SMS module enables real-time communication with the user by sending

text messages and making phone calls upon detecting suspicious activity. It communicates with the NodeMCU using AT commands, ensuring quick and reliable alert delivery without reliance on internet connectivity.

Relays

Relays are employed to control electrical appliances connected to the system, such as lights and the deterrent sprayer. Once an intruder is detected, the relays are activated to switch on these devices, offering both illumination and deterrence as part of the system's proactive response mechanism.

LEDs and Buzzers

LEDs provide visual indicators, while buzzers serve as audible alarms to notify occupants of detected intrusions. These components function as immediate local alerts, ensuring that individuals inside the premises are quickly made aware of potential threats.

Power Supply

A stable 5V/12V regulated power supply is used to operate the NodeMCU and peripheral components. Reliable power is essential to ensure continuous system operation, especially in environments where uninterrupted security monitoring is required.

Cables and Connectors

Jumper wires, USB cables, and connectors facilitate the integration of all hardware components. Proper cabling ensures stable connections, efficient communication, and smooth data transfer between devices within the system.

FUTURE ENHANCEMENTS

Further improvements to the system can be made by integration with an overall smart home ecosystem that complements the communication and coordination of multiple IoT devices (smart locks, smart cameras, and home automation devices). Energy efficiency can be maximized with low-power sensors with intelligent power management algorithms to minimize the amount of energy consumed when not in use. The system can also incorporate cloud-based analytics and machine learning models to predict possible security threats, improve detection accuracy, and allow remote access and control through mobile applications. Once these capabilities are further developed, increasing compatibility with communication protocols and platforms will greatly assist in making the system more versatile and adaptable to multiple home environments.

XI REFERENCES

[1] R. Piyare, “Internet of Things: Ubiquitous Home Control and Monitoring System using Android-based Smart Phone,” International Journal of Internet of Things, vol. 2, no. 1, pp. 5–11, 2013.

[2] S. R. Kodali, V. Jain, S. Bose, and L. Boppana, “IoT based smart security and home automation system,” in Proc. IEEE International Conference on Computing, Communication and Automation (ICCCA), Noida, India, May 2016, pp. 1286–1289.

[3] J. Redmon, S. Divvala, R. Girshick, and A. Farhadi, “You Only Look Once: Unified, Real-Time Object Detection,” in Proc. IEEE Conference on Computer Vision and Pattern Recognition (CVPR), Las Vegas, USA, June 2016, pp. 779–788.

[4] M. L. Das, “Privacy and Security Challenges in IoT,” Wireless Personal Communications, vol. 89, pp. 49–55, 2016.

[5] K. P. Kumar and P. P. Kumar, “SMS-based Communication for Home Security System,” International Journal of Science and Research (IJSR), vol. 4, no. 1, pp. 12–15, 2015.

[6] S. Rehman, M. Manzoor, and F. Hanif, “Real-Time Home Security System Based on Internet of Things and SMS Technology,” in Proc. IEEE International Conference on Emerging Technologies (ICET), Islamabad, Pakistan, Oct. 2021, pp. 43–47.

[7] A. Jain and R. Sharma, “IoT-Based Motion Detection System using PIR Sensors and ESP8266,” Journal of Advanced Research in Electronics and Communication Engineering (IJARECE), vol. 6, no. 7, pp. 553–557, 2020.

[8] R. K. Kodali and B. Sarjerao, “Energy-efficient IoT-enabled Home Automation System,” Procedia Computer Science, vol. 167, pp. 2553–2560, 2020.

[9] P. K. Mallick, “Analysis of IoT-Based Home Automation System,” Journal of Engineering Science and Technology, vol. 15, no. 5, pp. 3385–3392, 2020.

[10] T. Choudhury et al., “SMS-Based Intrusion Detection System for Home Security,” in Proc. International Conference on Computing, Power, and Communication Technologies (GUCON), New Delhi, India, 2020, pp. 456–459.

[11] K. Sha, T. A. Yang, W. Wei, and Q. Wang, “Security Challenges in Smart Home Environments,” Future Generation Computer Systems, vol. 78, pp. 693–709, 2018.

[12] H. S. Mohan and K. Bhaskaran, “YOLO-Based Object Detection in Surveillance Applications,” International Journal of Computer Applications (IJCA), vol. 177, no. 1, pp. 25–30, 2020.

[13] A. Al-Fuqaha et al., “Internet of Things: A Survey on Enabling Technologies, Protocols, and Applications,” IEEE Communications Surveys & Tutorials, vol. 17, no. 4, pp. 2347–2376, 2015.

[14] N. Kumar, P. Ray, and S. W. Loke, “Adaptive Techniques in IoT-enabled Smart

Homes: A Review," IEEE Internet of Things Journal, vol. 5, no. 6, pp. 4767–4782, 2018.

[15] R. Yadav and N. Singh, "Comparison of YOLO and SSD Algorithms for Object Detection in IoT Applications," Journal of Emerging Technologies and Innovative Research (JETIR), vol. 7, no. 5, pp. 287–292, 2020.

[16] B. K. Singh, "Design and Development of a SMS-based Home Security System," International Journal of Engineering and Technology (IJET), vol. 7, no. 4, pp. 1500–1504, 2020.

[17] Z. Zhang et al., "YOLOv4: Optimal Speed and Accuracy of Object Detection," arXiv preprint arXiv:2004.10934, 2020.

[18] P. Perwej and R. Perwej, "Design and Implementation of a Smart IoT-Based Home Automation System," International Journal of Advanced Research in Computer Science (IJARCS), vol. 8, no. 4, pp. 159–167, 2020.

[19] D. Sharma and S. Gupta, "Wireless Intrusion Detection and Notification System Using SMS," International Journal of Advanced Research in Electrical, Electronics and Instrumentation Engineering (IJAREEIE), vol. 9, no. 3, pp. 1234–1241, 2020.

[20] J. Han et al., "Efficient Deep Learning Algorithms for Smart Surveillance Applications," IEEE Transactions on Multimedia, vol. 23, pp. 51–63, 2021.

[21] L. Almeida et al., "Secure Communication in IoT-Based Systems," Journal of Network and Computer Applications, vol. 112, pp. 137–148, 2018.

[22] C. Oladimeji and F. Adeoti, "Implementation of PIR-Based Motion Sensors in Home Security Systems," International Journal of Engineering Research and Applications (IJERA), vol. 5, no. 3, pp. 101–106, 2019.

[23] A. K. Gupta, "Comparative Analysis of YOLO Models for Real-Time Object Detection," International Journal of Computer Science and Engineering (IJCSE), vol. 7, no. 6, pp. 245–252, 2020.

[24] S. K. Singh and R. D. Mishra, "IoT-Driven Home Security Solutions Using PIR Sensors and SMS Modules," International Journal of Emerging Trends in Engineering Research (IJETER), vol. 9, no. 5, pp. 734–740, 2021.

[25] F. Shahid et al., "AI and IoT Integration in Smart Home Applications," Journal of Ambient Intelligence and Humanized Computing, vol. 12, pp. 1015–1030, 2021.

[26] J. Kaur and M. Singh, "Low-Cost SMS Based Smart Security System for Homes," International Journal of Innovative Research in Science, Engineering and Technology (IJIRSET), vol. 6, no. 8, pp. 1330–1335, 2020.

[27] P. N. Pathak, "A Cost-Effective IoT Solution for Intrusion Detection Using ESP8266," International Journal of Advanced Research (IJAR), vol. 6, no. 3, pp. 45–50, 2020.

[28] V. Ramesh, “Implementation of YOLOv5 for Security Monitoring,” Proceedings of the International Conference on Emerging Technologies in Security (ICETS), pp. 233–240, 2021.

[29] M. Chandra and A. Prasad, “IoT-Based Home Automation System Using SMS and ESP8266,” International Journal of Engineering and Advanced Technology (IJEAT), vol. 8, no. 5, pp. 543–548, 2020.

[30] T. Nguyen et al., “Energy-Efficient IoT Solutions for Home Security,” Sensors and Actuators A: Physical, vol. 303, pp. 1–9, 2020.

4% Overall Similarity

The combined total of all matches, including overlapping sources, for each database.

Filtered from the Report

- Bibliography

Match Groups

- 20 Not Cited or Quoted 4%
  Matches with neither in-text citation nor quotation marks
- 0 Missing Quotations 0%
  Matches that are still very similar to source material
- 0 Missing Citation 0%
  Matches that have quotation marks, but no in-text citation
- 0 Cited and Quoted 0%
  Matches with in-text citation present, but no quotation marks

Top Sources

2% Internet sources
1% Publications
3% Submitted works (Student Papers)

Integrity Flags

0 Integrity Flags for Review

Our system's algorithms look deeply at a document for any inconsistencies that would set it apart from a normal submission. If we notice something strange, we flag it for you to review.

A Flag is not necessarily an indicator of a problem. However, we'd recommend you focus your attention there for further review.

APPENDIX

APPENDIX

A) SOURCE CODE

```
#include <Wire.h>

#include <LiquidCrystal_I2C.h>

// LCD setup (address may be 0x27 or 0x3F, check your module)

LiquidCrystal_I2C lcd(0x27, 16, 2);

// Buzzer pin

#define BUZZER_PIN D6   // You can change pin if needed

void setup() {

  Serial.begin(9600);          // Start serial communication

  lcd.init();                  // Initialize LCD

  lcd.backlight();             // Turn on backlight

  pinMode(BUZZER_PIN, OUTPUT); // Set buzzer pin as output

  digitalWrite(BUZZER_PIN, LOW);

  lcd.clear();

  lcd.setCursor(0,0);

  lcd.print("Smart Surveillance");

  delay(2000);

  lcd.clear();

  lcd.setCursor(0,0);

  lcd.print("System Normal");

}
```

```
void loop() {
  if (Serial.available() > 0) {
    char inputChar = Serial.read();   // Read incoming character
    lcd.clear();
    if (inputChar == 'A') {
      // Display abnormal activity
      lcd.setCursor(0,0);
      lcd.print("Abnormal Activity");
      lcd.setCursor(0,1);
      lcd.print("Detected!");
      // Buzzer alert (beep 3 times)
      for (int i = 0; i < 3; i++) {
        digitalWrite(BUZZER_PIN, HIGH);
        delay(300);
        digitalWrite(BUZZER_PIN, LOW);
        delay(300);
      }
    } else {
      lcd.setCursor(0,0);
      lcd.print("System Normal");
      digitalWrite(BUZZER_PIN, LOW);  // Ensure buzzer is OFF
    }
  }
```

}

B) SOURCE CODE:

```
import numpy as np
from tkinter import *
import os
from tkinter import filedialog
import cv2
import time,sys
from matplotlib import pyplot as plt
from tkinter import messagebox
def endprogram():
    print ("\nProgram terminated!")
    sys.exit()

def testing():
    global testing_screen
    testing_screen = Toplevel(main_screen)
    testing_screen.title("Testing")
    # login_screen.geometry("400x300")
    testing_screen.geometry("600x450+650+150")
    testing_screen.minsize(120, 1)
    testing_screen.maxsize(1604, 881)
    testing_screen.resizable(1, 1)
    testing_screen.configure(bg='cyan')
    # login_screen.title("New Toplevel")

    Label(testing_screen, text="'Upload Image'", disabledforeground="#a3a3a3",
        foreground="#000000", width="300", height="2",bg='cyan', font=("Calibri",
16)).pack()
    Label(testing_screen, text="").pack()
    Label(testing_screen, text="").pack()
    Label(testing_screen, text="").pack()
```

```
    Button(testing_screen, text="'Upload Image'", font=(
        'Verdana', 15), height="2", width="30",bg='cyan', command=imgtest).pack()


global affect
def imgtest():
    # import impre
    import_file_path = filedialog.askopenfilename()
    # image = cv2.imread(import_file_path)
    image = cv2.imread(import_file_path)
    from ultralytics import YOLO
    model = YOLO('runs/detect/weapon/weights/best.pt')
    # Run YOLOv8 inference on the image
    results = model(image, conf=0.1)
    # Annotate the image
    annotated_image = image.copy()
    for result in results:
        if result.boxes:
            for box in result.boxes:
                # Extract class ID and name
                class_id = int(box.cls)
                object_name = model.names[class_id]
                # Extract bounding box coordinates (x1, y1, x2, y2)
                x1, y1, x2, y2 = map(int, box.xyxy[0])
                # Calculate bounding box area
                width = x2 - x1
                height = y2 - y1
                area = width * height
                # Draw the bounding box and label
                cv2.rectangle(annotated_image, (x1, y1), (x2, y2), (0, 255, 0), 2)
                label = f"{object_name}"
                cv2.putText(
                    annotated_image, label, (x1, y1 - 10),
                    cv2.FONT_HERSHEY_SIMPLEX, 0.5, (0, 255, 0), 2
```

```
            )
            print(f"Detected: {object_name}")
    # Display the annotated image
    cv2.imshow("YOLOv8 Prediction", annotated_image)
    cv2.waitKey(0)  # Wait for a key press to close the window
    cv2.destroyAllWindows()
import pyttsx3
# Initialize text-to-speech engine
engine = pyttsx3.init()
engine.setProperty('rate', 150)  # Speed of speech
def give_voice_command(command):
    engine.say(command)
    engine.runAndWait()
def Camera1():
    import cv2
    from ultralytics import YOLO
    import serial
    import time
    ser = serial.Serial('COM3', 9600, timeout=1)
    # Load the YOLOv8 model
    model = YOLO('runs/detect/weapon/weights/best.pt')
    #model = YOLO('runs/detect/weapon/weights/best.pt')
    # Open the video file
    # video_path = "path/to/your/video/file.mp4"
    cap = cv2.VideoCapture(0)
    dd1=0
    # Loop through the video frames
    while cap.isOpened():
        # Read a frame from the video
        success, frame = cap.read()
        if success:
            # Run YOLOv8 inference on the frame
            results = model(frame, conf=0.4)
            for result in results:
```

```
            if result.boxes:
                box = result.boxes[0]
                class_id = int(box.cls)
                object_name = model.names[class_id]
                print(object_name)
                if object_name != 'person':
                    dd1 += 1
                if dd1 == 50:
                    dd1 = 0

                    time.sleep(5)
                    data = "A"
                    ser.write(data.encode())  # Send the data to Arduino
                    time.sleep(2)  # Add a short delay to avoid overwhelming the Arduino with
data'''
                    annotated_frame = results[0].plot()
                    cv2.imwrite("alert.jpg", annotated_frame)
                    sendmail()
                    sendmsg("6383164887", "Activity Name:" + object_name +" Loction BHC")
        # Visualize the results on the frame
        annotated_frame = results[0].plot()
        # Display the annotated frame
        cv2.imshow("YOLOv8 Inference", annotated_frame)

        # Break the loop if 'q' is pressed
        if cv2.waitKey(1) & 0xFF == ord("q"):
            break
    # Release the video capture object and close the display window
    ser.close()
    cap.release()
    cv2.destroyAllWindows()
def sendmsg(targetno,message):
    import requests
    requests.post(
```

```
"http://sms.creativepoint.in/api/push.json?apikey=6555c521622c1&route=transsms&sender=
FSSMSS&mobileno=" + targetno + "&text=Dear customer your msg is " + message + "  Sent
By FSMSG FSSMSS")
def sendmail():
    import smtplib
    from email.mime.multipart import MIMEMultipart
    from email.mime.text import MIMEText
    from email.mime.base import MIMEBase
    from email import encoders
    fromaddr = "projectmailm@gmail.com"
    toaddr =  "kishorekhanth2005@gmail.com"
    # instance of MIMEMultipart
    msg = MIMEMultipart()
    # storing the senders email address
    msg['From'] = fromaddr
    # storing the receivers email address
    msg['To'] = toaddr
    # storing the subject
    msg['Subject'] = "Alert"
    # string to store the body of the mail
    body = "Dangerous Action Detection"
    # attach the body with the msg instance
    msg.attach(MIMEText(body, 'plain'))
    # open the file to be sent
    filename = "alert.jpg"
    attachment = open("alert.jpg", "rb")
    # instance of MIMEBase and named as p
    p = MIMEBase('application', 'octet-stream')
    # To change the payload into encoded form
    p.set_payload((attachment).read())
    # encode into base64
    encoders.encode_base64(p)
    p.add_header('Content-Disposition', "attachment; filename= %s" % filename)
```

```
    # attach the instance 'p' to instance 'msg'
    msg.attach(p)
    # creates SMTP session
    s = smtplib.SMTP('smtp.gmail.com', 587)
    # start TLS for security
    s.starttls()
    # Authentication
    s.login(fromaddr, "qmgn xecl bkqv musr")
    # Converts the Multipart msg into a string
    text = msg.as_string()
    # sending the mail
    s.sendmail(fromaddr, toaddr, text)
    # terminating the session
    s.quit()
def main_account_screen():
    global main_screen
    main_screen = Tk()
    width = 600
    height = 600
    screen_width = main_screen.winfo_screenwidth()
    screen_height = main_screen.winfo_screenheight()
    x = (screen_width / 2) - (width / 2)
    y = (screen_height / 2) - (height / 2)
    main_screen.geometry("%dx%d+%d+%d" % (width, height, x, y))
    main_screen.resizable(0, 0)
    # main_screen.geometry("300x250")
    main_screen.configure()
    main_screen.title("   Dangerous Action Detection ")

    Label(text="   Dangerous Action Detection", width="300", height="5", font=("Calibri",
16)).pack()
    Label(text="").pack()
    Button(text="Image", font=(
        'Verdana', 15), height="2", width="30", command=imgtest).pack(side=TOP)
```

```
    Label(text="").pack()
    Button(text="Camera", font=(
        'Verdana', 15), height="2", width="30", command=Camera1).pack(side=TOP)
    main_screen.mainloop()

main_account_screen()
```
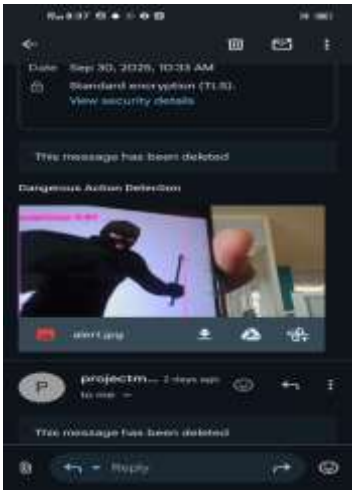
OUTPUT